BenchDuino Nano
Development System Overview

George Zafiropoulos
KJ6VU

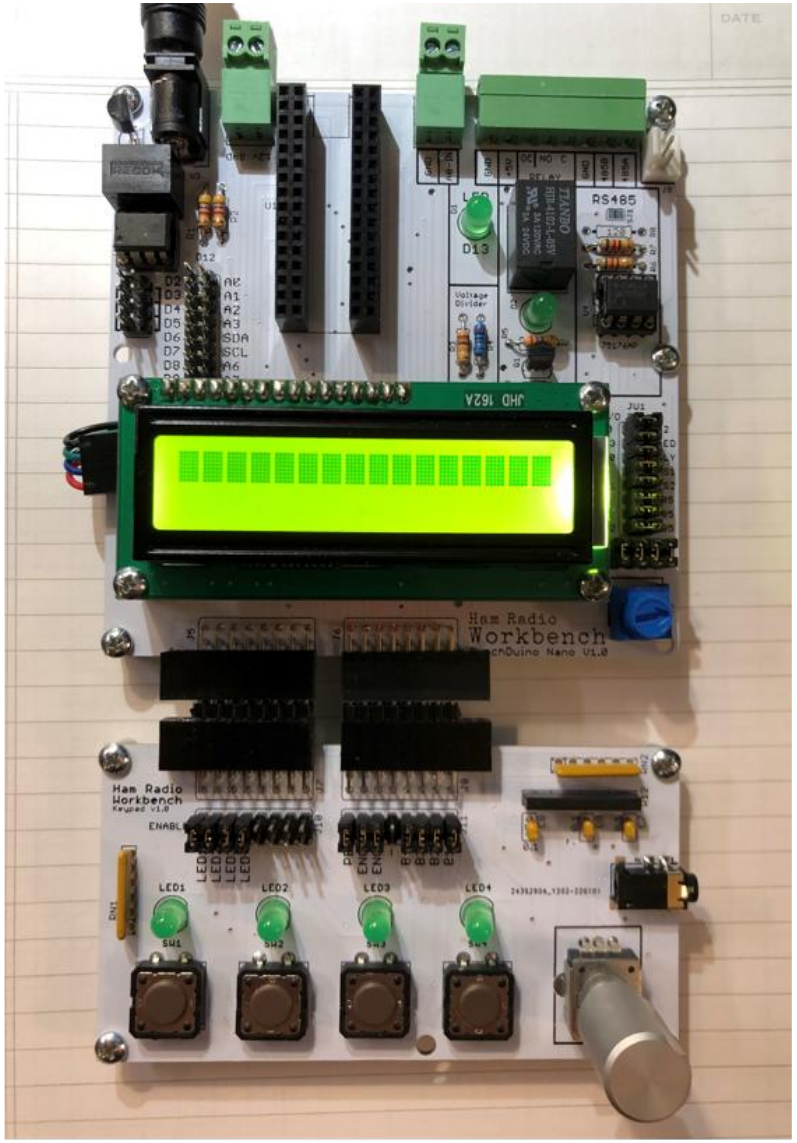

Original

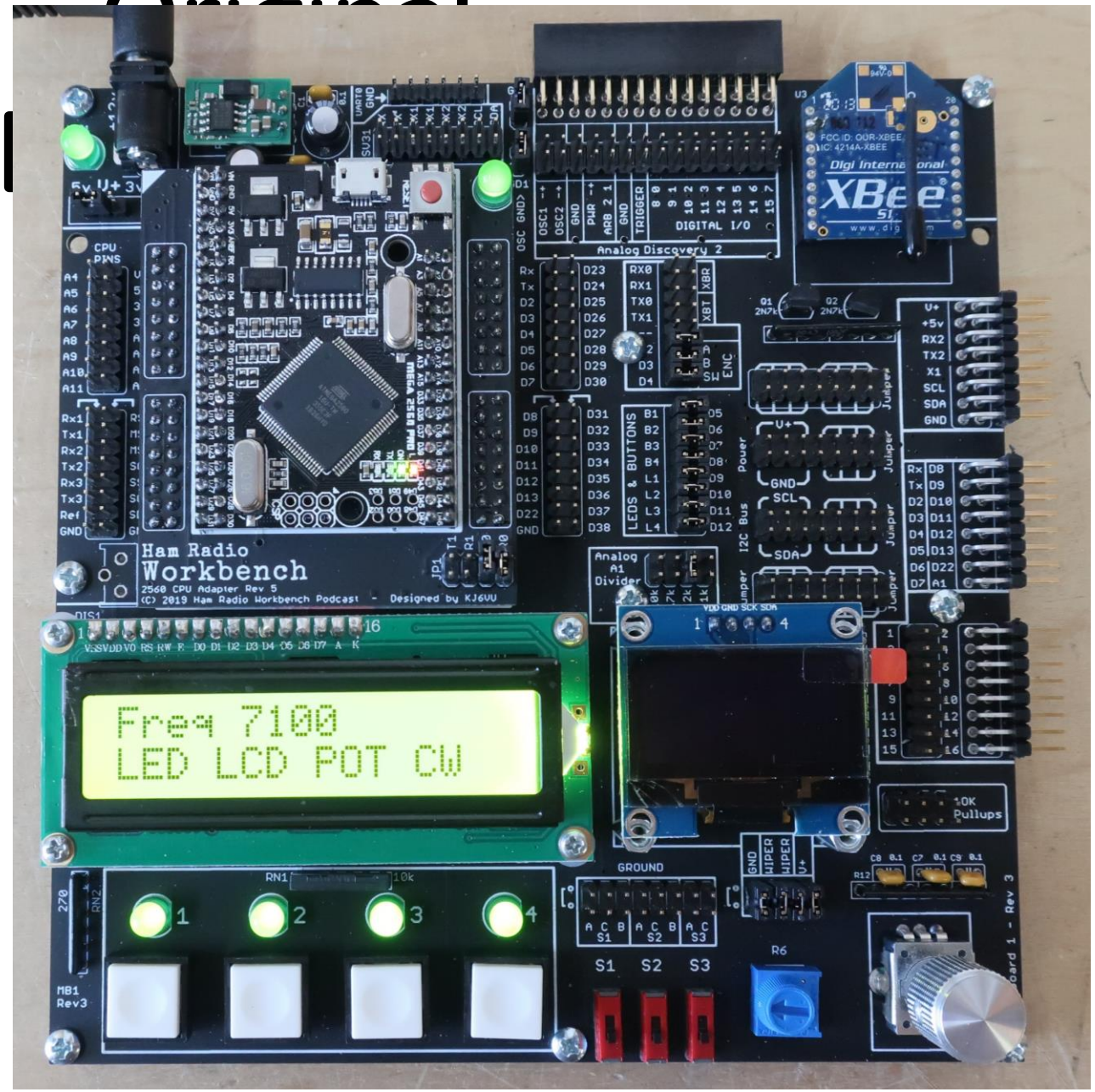
Ham Radio
Workbench
2560 CPU Adapter Rev 5
(C) 2019 Ham Radio Workbench Podcast - Designed by KJ6VU
Freq 7100
LED LCD POT CW
Analog Discovery 2
DIGITAL I/O
XBee
S1
S2
S3
R6
GROUND
10K Pullups

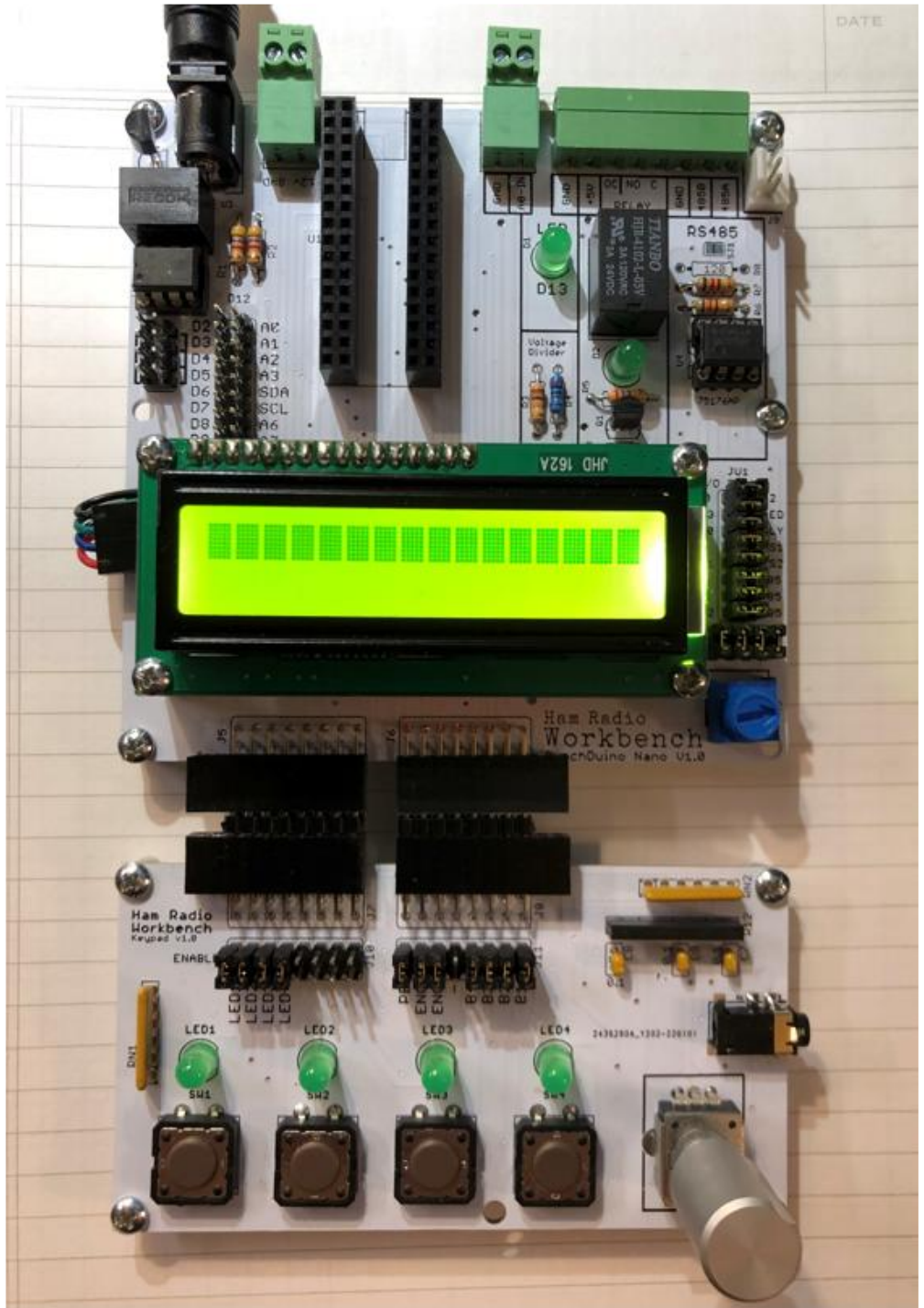
Ham Radio
Workbench
Keypad v1.0
LED1
LED2
LED3
LED4
RS485

Problem Statement

- Every one of my projects has a typical set of hardware…
  - Microcontroller
  - LCD
  - Buttons
  - LEDs
  - Rotary encoder
  - UART comms
  - Potentiometer
  - Temperature sensor
- Every prototype is a fragile jumble of wires or a series of discarded PCBs
- I want a reliable, standardized platform for prototyping

Typical Approach: Breakout Boards

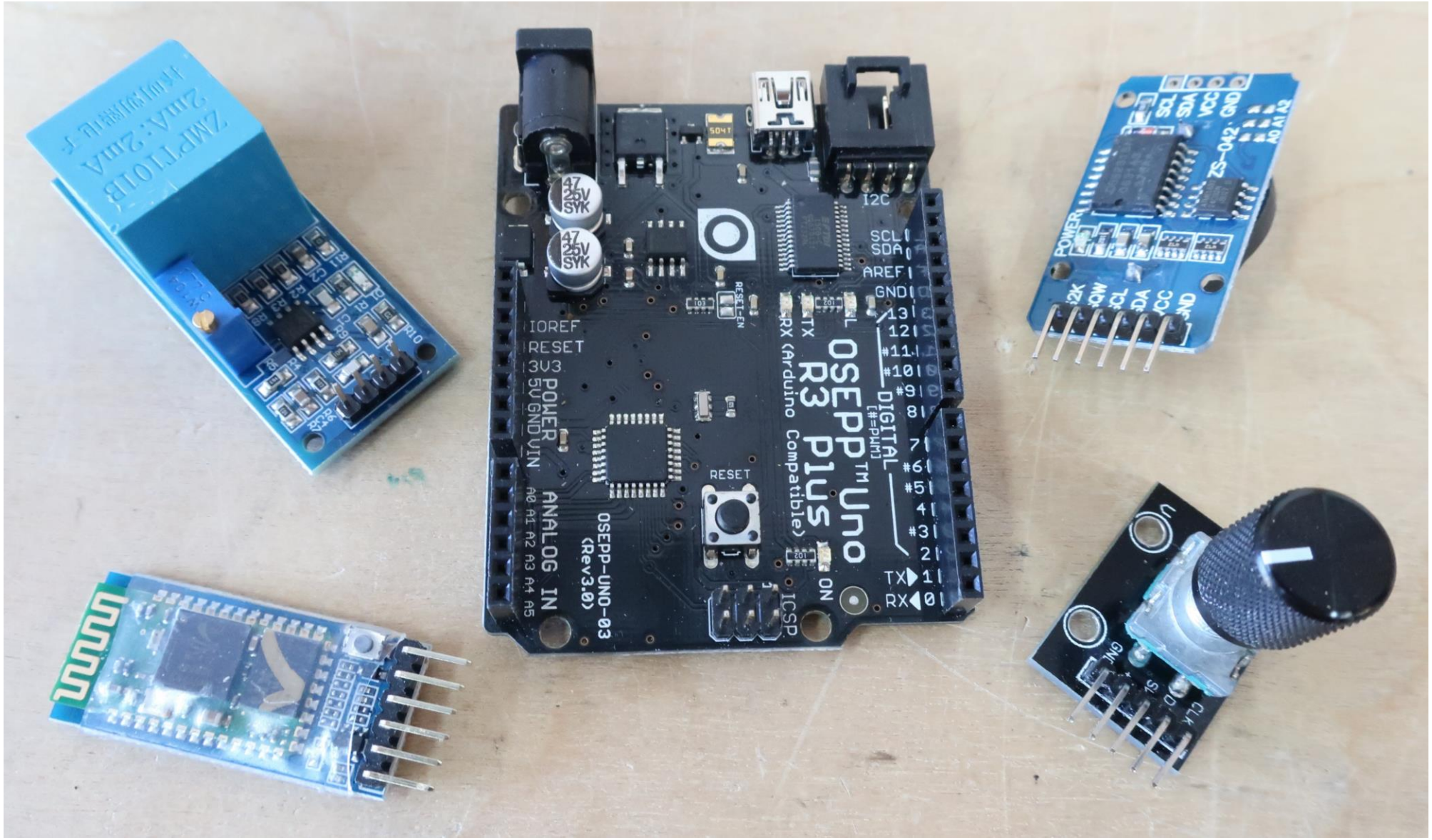

… And Jumper Wires

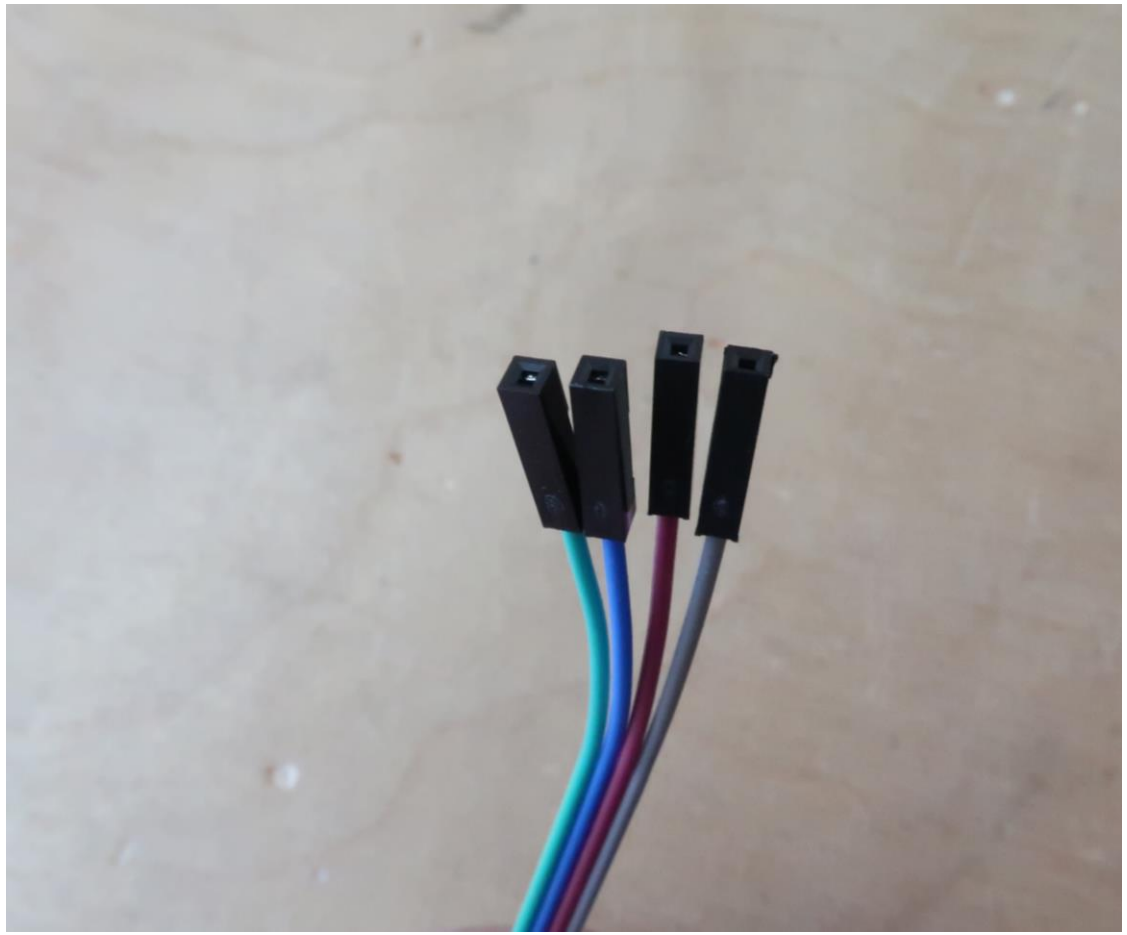

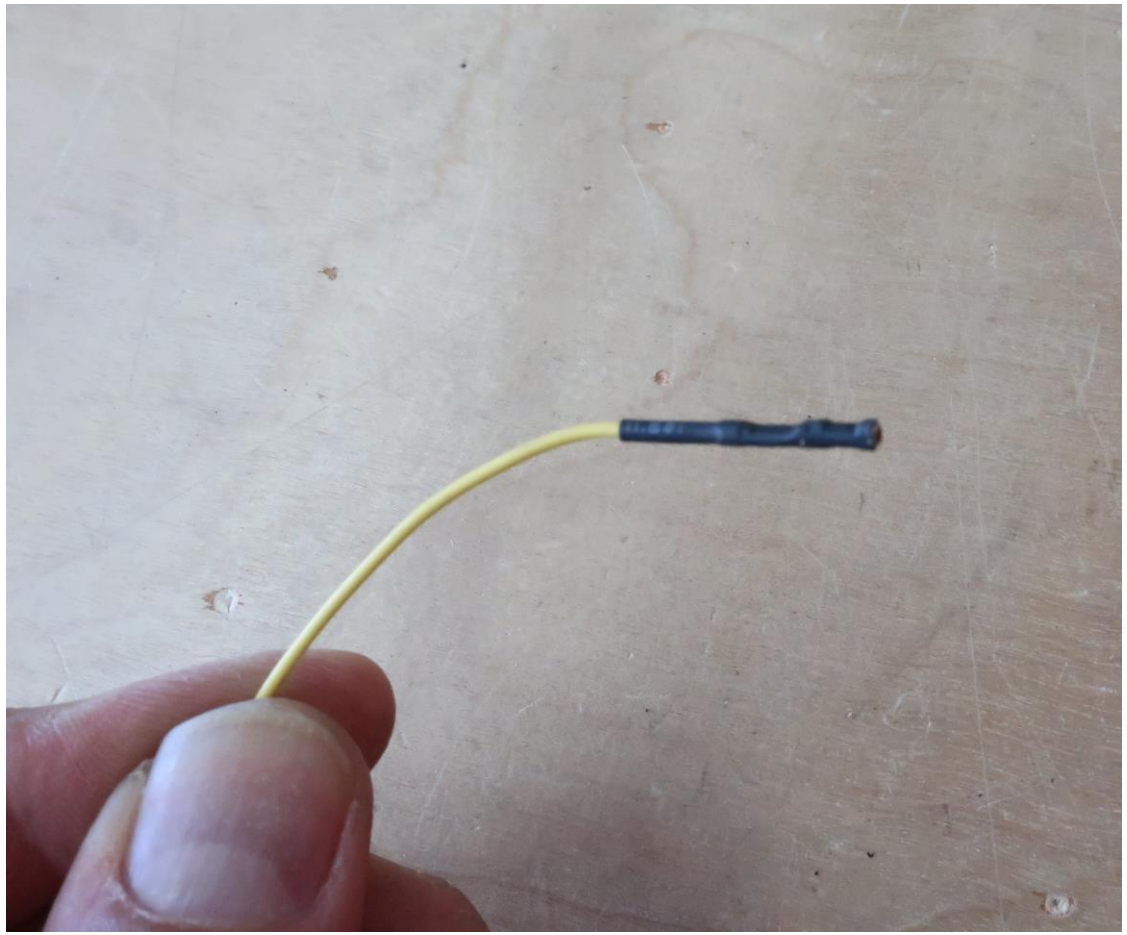

Goal…
Build a Reusable Prototyping Platform

- Prototyping & development board
- Quickly assemble microcontroller-based prototypes
- Supports popular Arduino Nano form factor
- Typical most often used peripherals
- Expansion to external proto boards or custom PCBs

Arduino Nano Every

	Mega	Uno	Nano Every	
Program Flash	256k	32k	48k	
RAM	8k	2k	6k	
EEPROM	4k	1k	256b	(Add EEPROM)

7-21 V power input
22 - 5v I/O pins
8 ADC 10 bit
5 PWM
1 UART
1 I2C
1 SPI

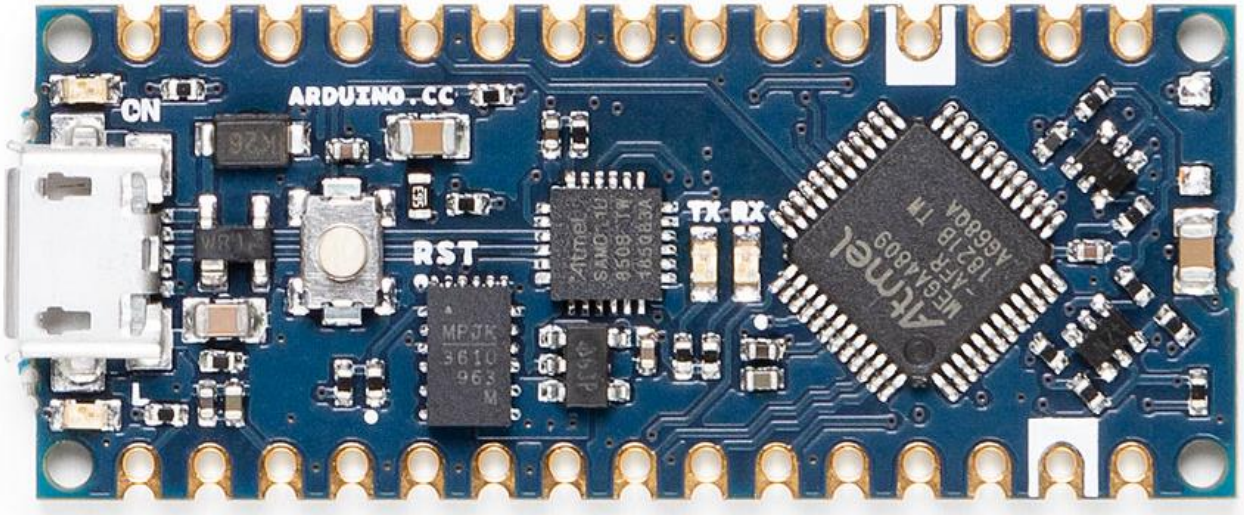

Arduino Nano

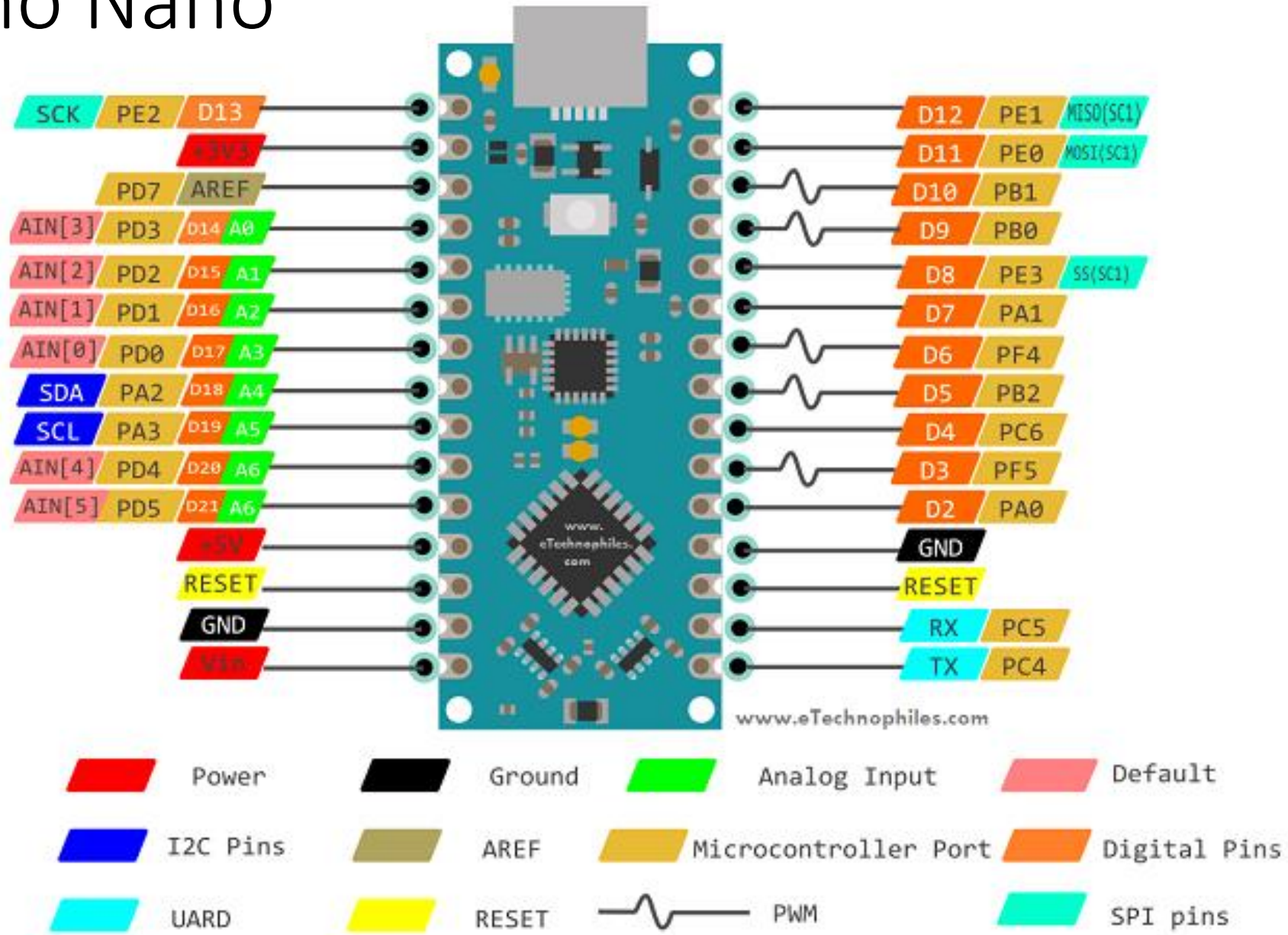

BenchDuino Nano

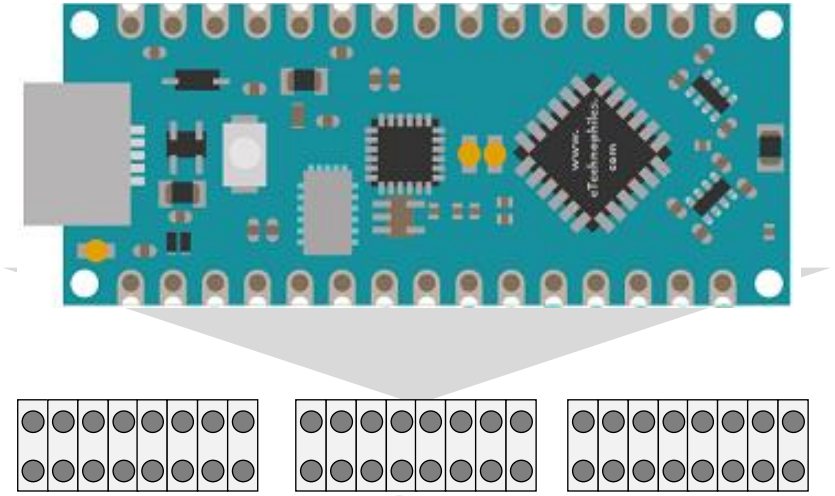

Jumpers connect Arduino pins to peripherals
Remove jumpers to customize

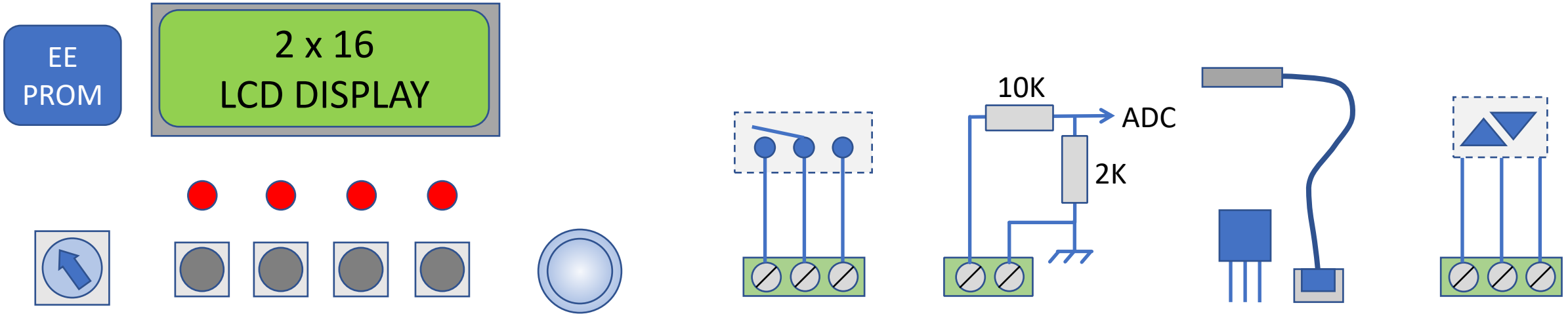

POT

2 x 16 I2C LCD
4x LEDS
4x BUTTONS

ROTARY ENCODER

SPDT RELAY

VOLT METER

18B20 TEMP SENSOR

RS485

Display

- I2C connected
- 2 lines
- 16 characters
- Mounts flat or on angled holder

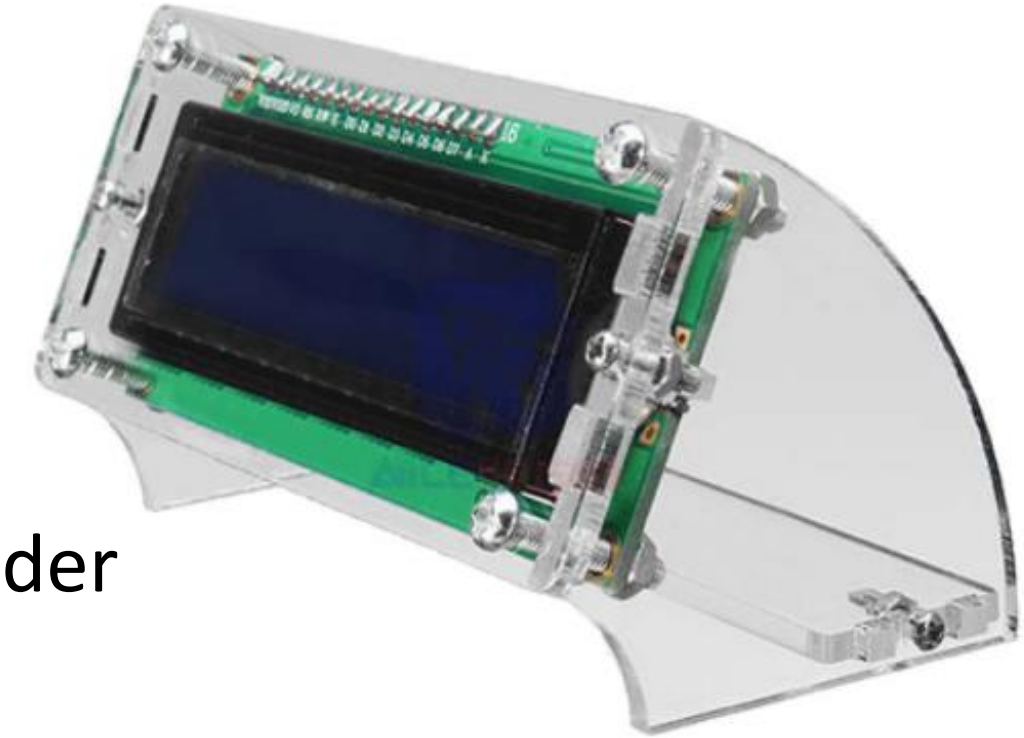

BenchDuino Nano

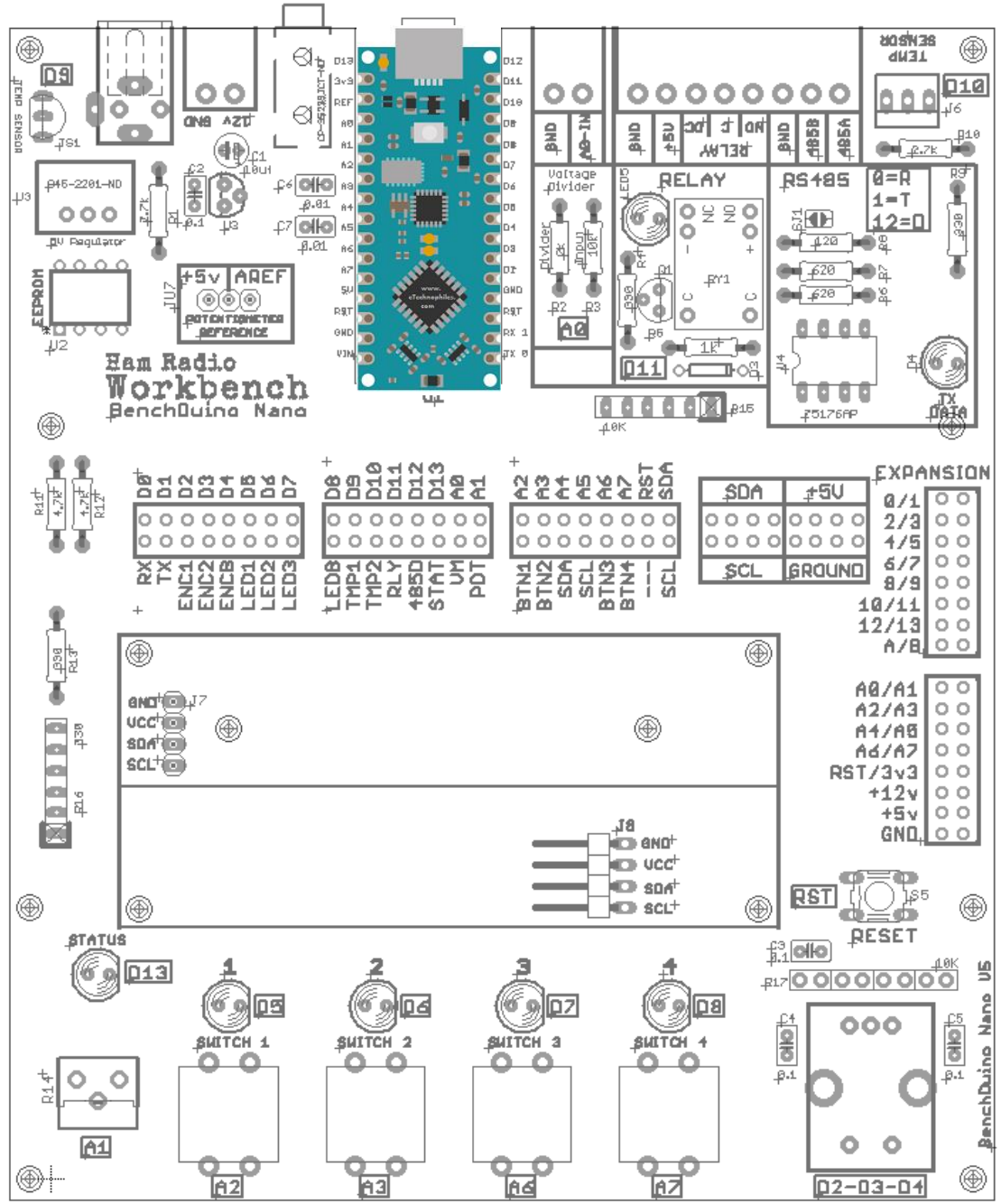

Why RS-485?

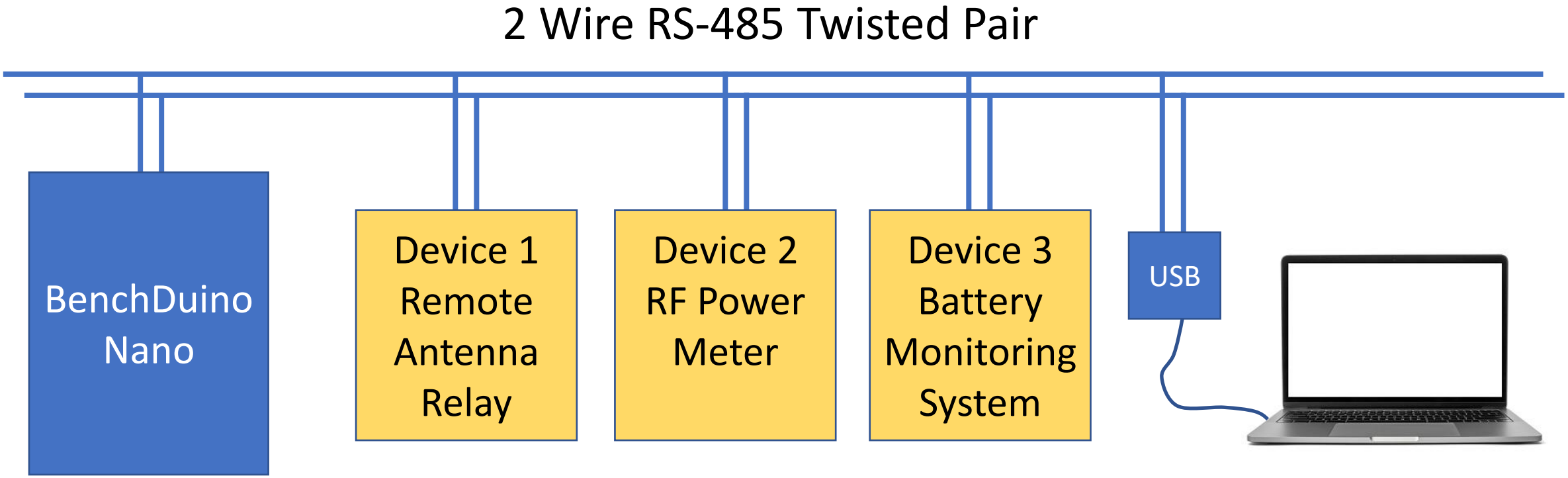

- Half duplex, multidrop serial connection
- Maximum distance of 4000’

USB to RS-485 converters

$16

$29

RS-485 over CAT5

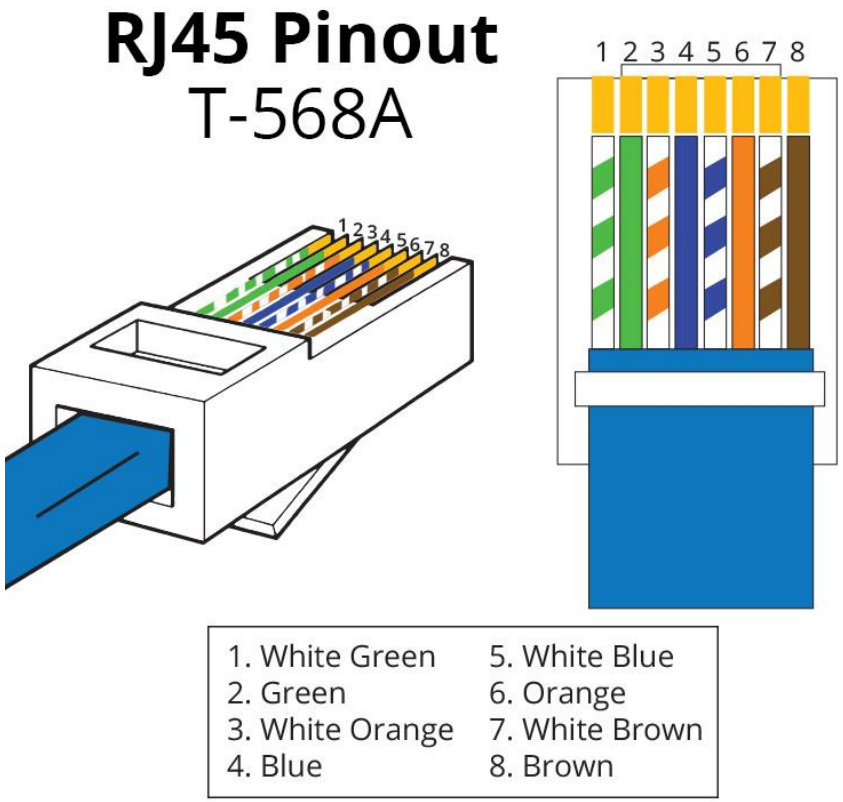

Pinout

1 Data A
2 Data B
3 n/c
4 +12V
5 +12V
6 n/c
7 Ground
8 Ground

18650 LiOn Battery Tester Project Board

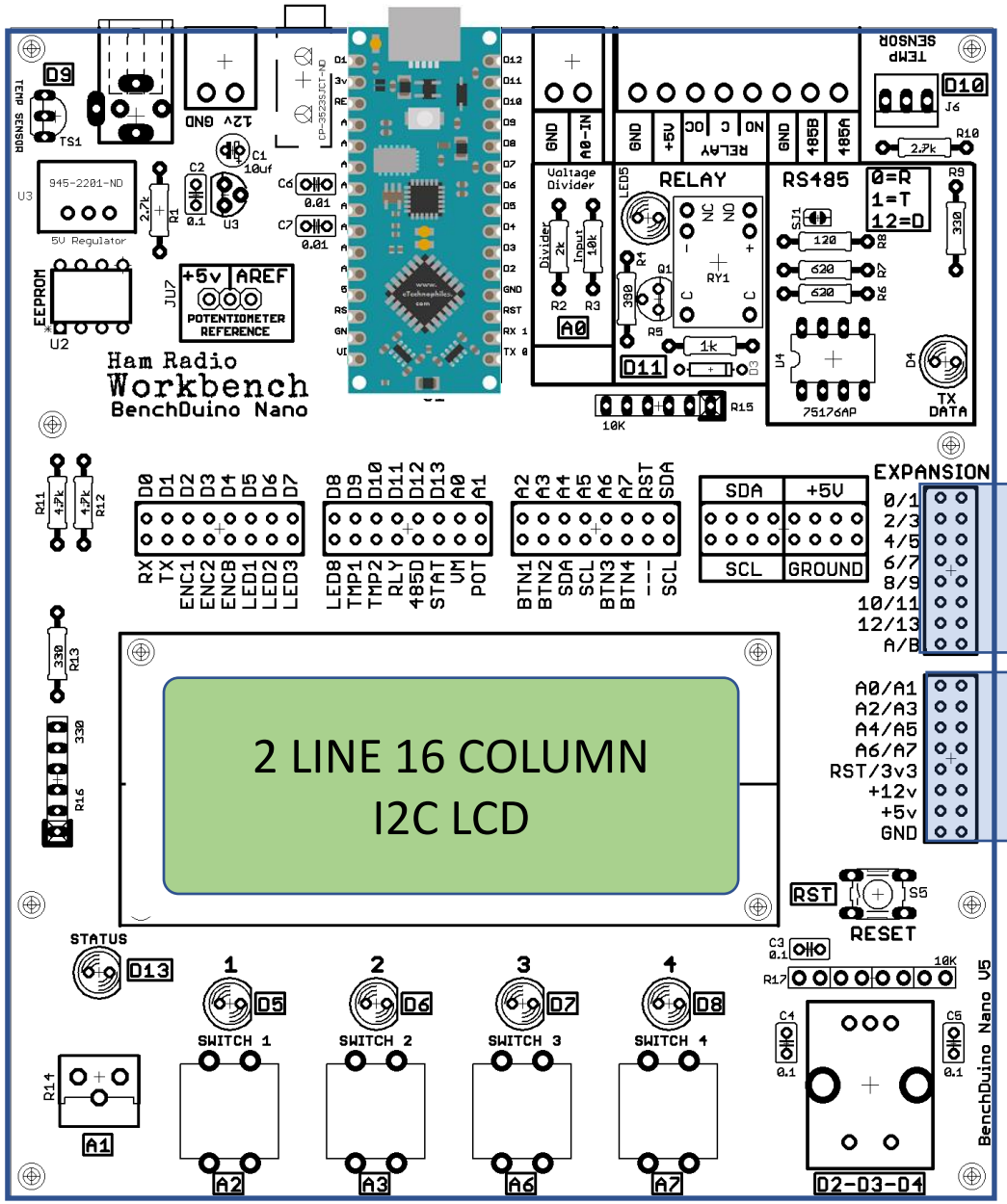

1. Insert the battery to be tested
2. Controller applies multiple loads
3. Measures voltage and current
4. Calculates internal resistance
5. Determines the quality of the battery

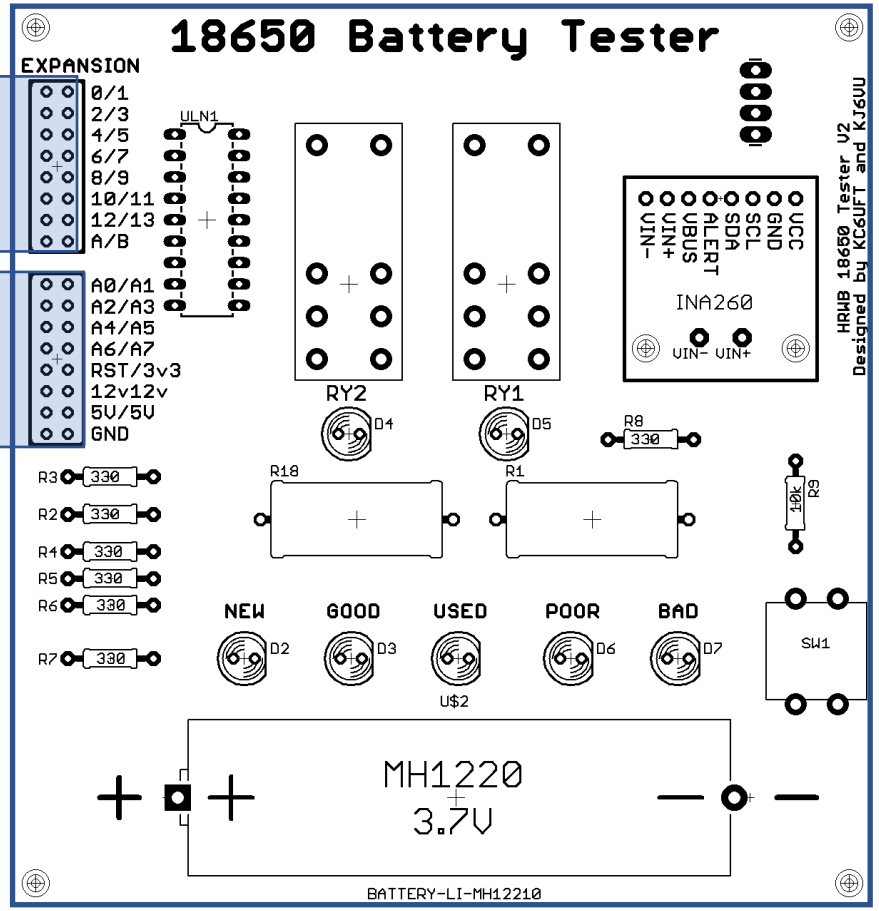

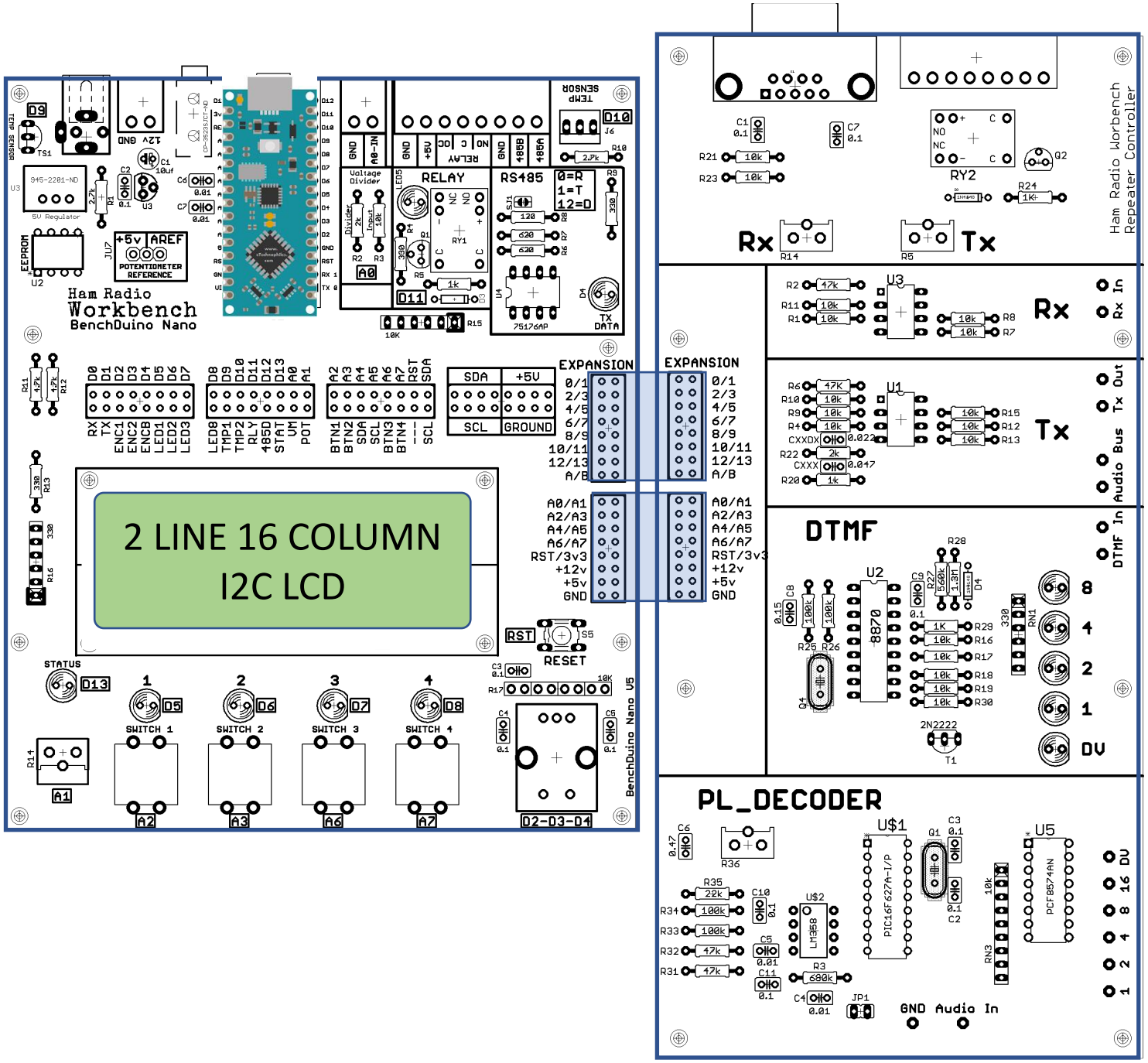

Radio Project Interface Board

- Rx buffer amp
- Tx buffer amp
- DTMF decoder
- PL decoder

What can you build with it?

- Simple repeater controller
- Remote controller
- Adventure alert controller

What Now ?

- Final version of PCB’s at the board fab
- Available as a Ham Radio Workbench build project board set


Q&A